RESONANCE LTD

Optical Solutions & Technologies

Resonance PID 6mm & 12mm PID Bulbs

Photo-ionization lamps are compact, rugged, low-pressure gas discharge lamps used in photo-ionization detectors (PIDs) to measure various volatile organic compounds (VOCs).

Resonance mass produces an extensive range of RF excited lamps filled with a variety of gases. In these lamps, the natural "RESONANCE" frequency of the gas is excited by plasma in the bulb. Combinations of the appropriate fill gases and window materials are used to select near monochromatic energies in the 11.7 to 4.9 eV range. Unique sealing and processing technologies developed during work for the US and Japanese space programs yield lamps of exceptionally high stability and output. Burn-in and VUV testing of every lamp ensures the best quality to meet customers' requirements throughout the world.

Operation

In a low-pressure RF-excited gas discharge lamp electrons collisionally excite atoms in the lamp causing them to emit at highly specific spectral emission wavelengths. These spectral "lines" will typically appear in all spectral regions down to the short wavelength cut-off of the window. In Resonance's lamps the presence of unwanted "impurity lines" is minimized and is typically far less than 0.1 percent. This insures that the species-to-species photoionization sensitivity of a PID equipped with a Resonance lamp will not change from lamp to lamp or drift with time.

The most commonly used lamp for PID purposes is the 10.6, 10.0 eV magnesium fluoride windowed lamp filled with Krypton. Resonance's lamp has a hard glass seal allowing high temperature processing, a special low fluorescence grade of magnesium fluoride with very high VUV transmission and a high capacity chemical getter. The combined effect of these advanced construction methods is the production of a lamp with very high spectral purity and exceptional operational and shelf life. These lamps are similar in construction to those in use on the Hubble Space Telescope, which meet the requirements of a 10 year mission life in the rigorous thermal environment of space.

During use the lamp may appear to drop in intensity due to an accumulation of photo polymerized deposits on the window. These deposits result from the cross linking of organic compounds to form a thin UV-absorbing film on the window. These films may be removed by a methanol wipe with a cotton swab or by a gentle polish with 0.3-micron aluminum oxide powder. When the window cleanness is maintained the operational life of the Resonance lamps will exceed 2,000 burning hours

Model Number	Kr10.6-B6x30	Kr10.0-B6x30	Xe8.4-B6x31	Kr10.6-B12x50	Kr10.0-B12x51	Xe8.4-B12x50	units
Peak Wavelengths	116.5, 123.6	123.6	117,124, 145	116.5, 123.6	123.6	147	nm
Window	MgF2	CaF2	MgF2	MgF2	CaF2	MgF2	
Full angle output	45	45	45	45	45	45	Degrees
Length/OD	<3.0/0.6	<3.1/0.6	<3.1/0.6	<5.0/1.2	<5.1/1.2	<5.0/1.2	cm
Shelf Life	>5	>5	>5	>5	>5	>5	years
Operational Life	>2,000 hr	>2,000 hr	>2,000 hr	>1,000 hr	>1,000 hr	>1,000 hr	hours

Standard PID Bulbs Dimensions

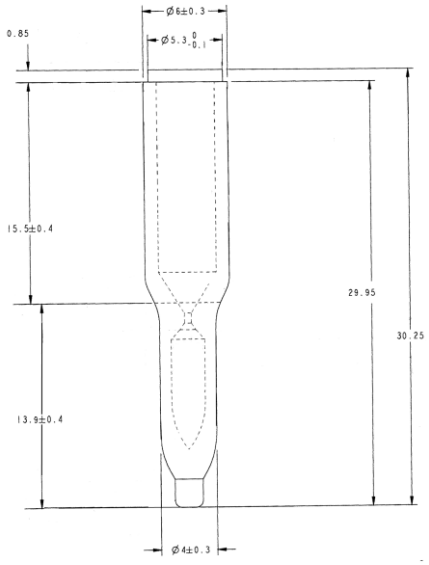

6mm OD Bulb

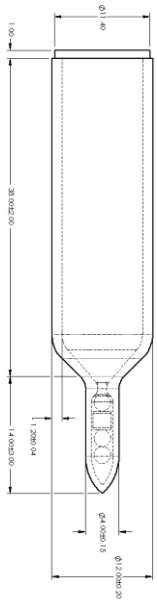

12mm OD Bulb

Krypton VUV 10.0 eV VUV spectrum

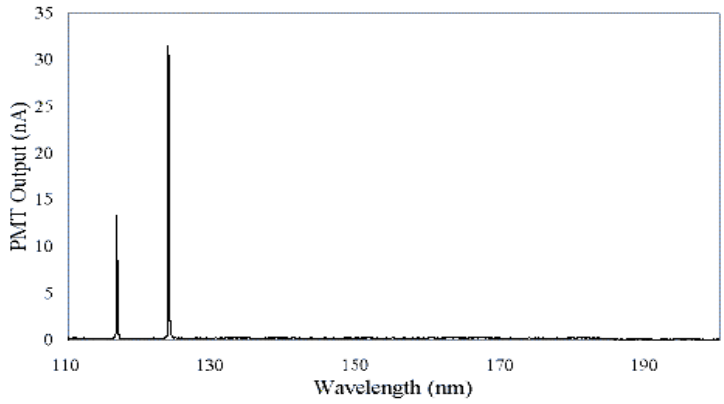

Krypton VUV 10.6 eV VUV spectrum

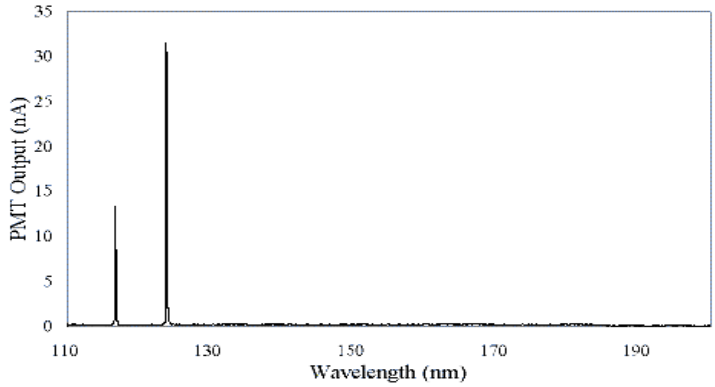
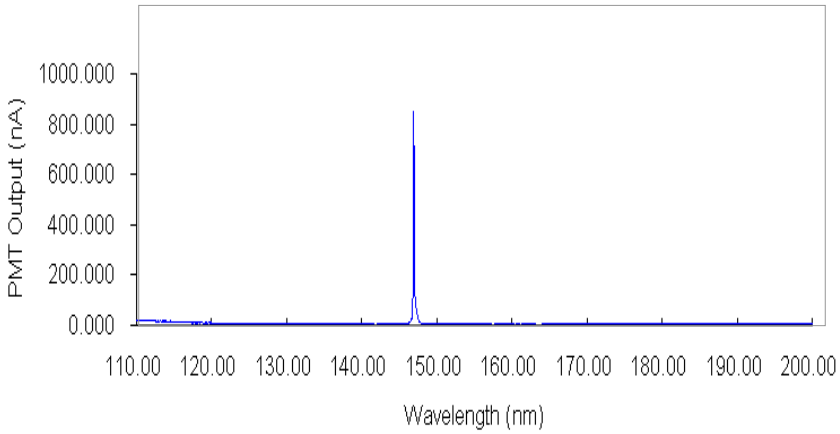
Xenon 8.4 eV VUV Spectrum